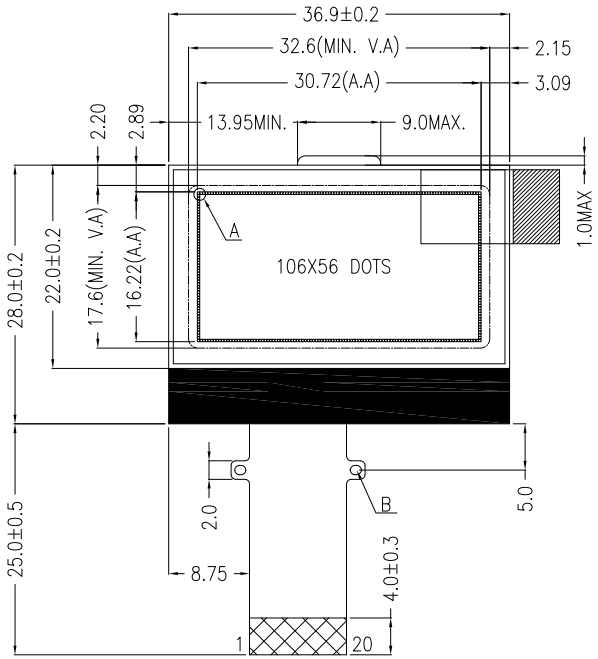

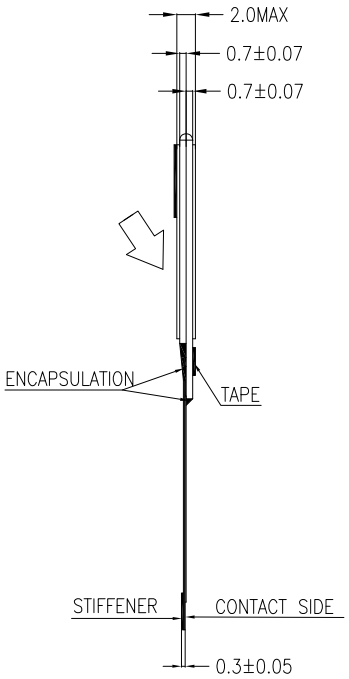

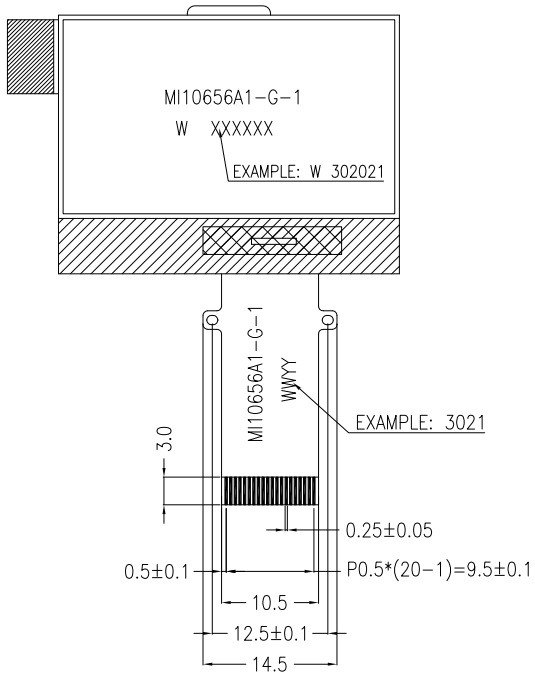

PIN ASSIGNMENT

PIN	SYMBOL
1	NC
2	VG
3	NC
4	NC
5	NC
6	NC
7	XV0
8	V0
9	NC
10	NC
11	NC
12	NC
13	VSS
14	VDD
15	SDA
16	SCL
17	A0
18	RSTB
19	CSB
20	NC

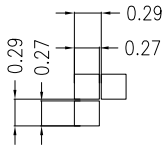

DETAIL A
(SCALE 10:1)

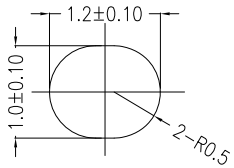

DETAIL B
(SCALE 10:1)

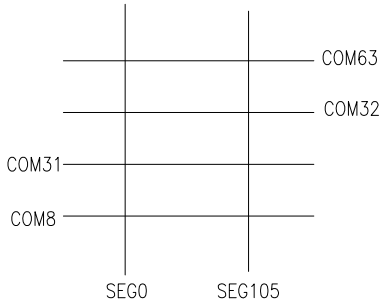

NOTES:

1. DISPLAY TYPE: FSTN, REFLECTIVE, POSITIVE
2. OPERATING VOLTAGE: VDD=3.0V, VOP=9.5V
3. DRIVE METHOD: 1/65DUTY, 1/9BIAS
4. VIEWING DIRECTION: 12:00 O'CLOCK
5. DRIVER IC: ST7567-G4B OR THE EQUIVALENT
6. OPERATING TEMP.: -20°C ~ 70°C
7. STORAGE TEMP.: -30°C ~ 80°C
8. LED BACKLIGHT: -
9. THE SINGLE LAYER AREA OF FPC IS BENDBLE AND THE BENDING RADIUS MUST BE NOT LESS THAN 1.5MM
10. GENERAL TOLERANCE: ±0.3MM
11. ROHS COMPLIANT

VER.	REVISED DESCRIPTION	REVISER	DATE
01	FIRST ISSUE	RITA	2021.08.20

MULTI-INNO TECHNOLOGY CO., LTD.

DRAWN BY:	RITA 2021.08.20		MODULE P/N: MI10656A1-G-1
CHECKED BY:		SCALE : 1/1	
APPROVED BY:		UNIT: mm	DESCRIPTION: GRAPHIC MODULE
VERSION NO:	01	SHEET NO.: 1/1	