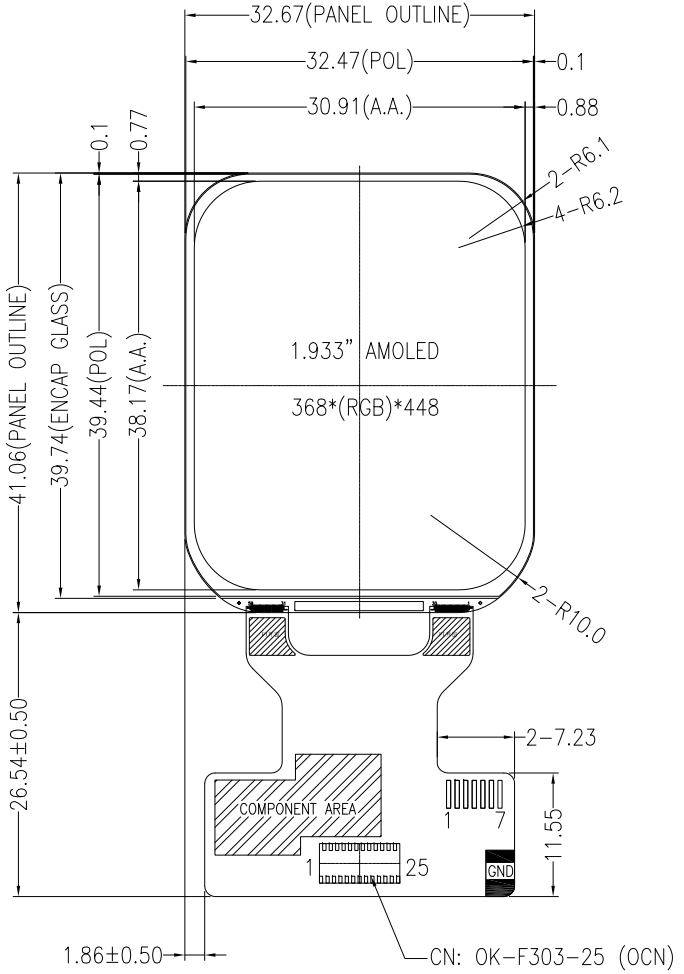

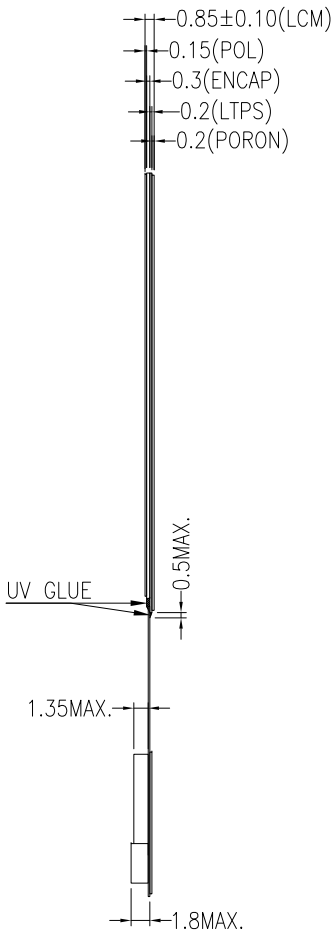

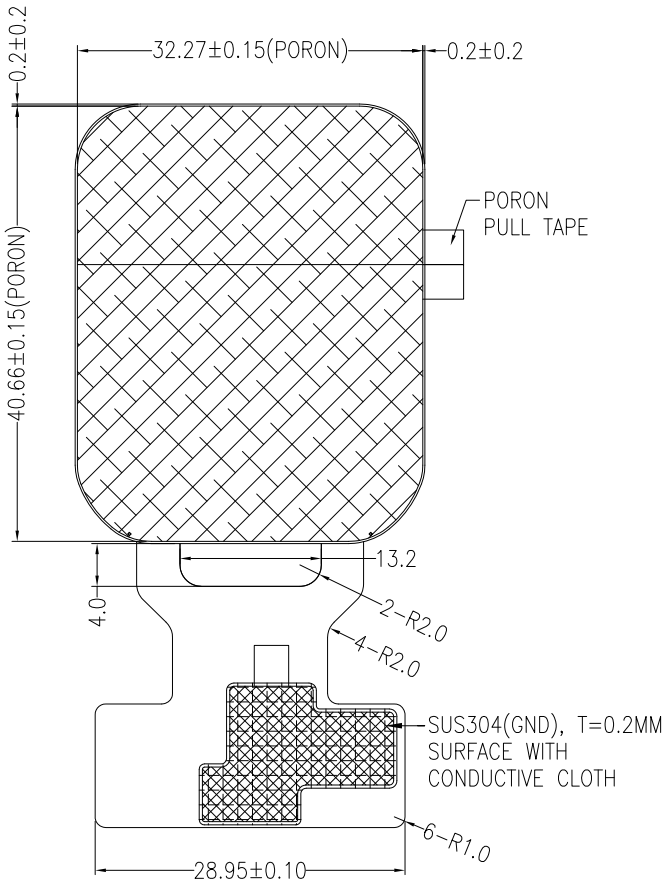

PIN DESCRIPTION

PIN	SYMBOL
1	TE
2	VBAT
3	RESET
4	VCI_EN
5	MTP
6	GND
7	D2
8	D0
9	D3
10	SD0
11	D1
12	SCL
13	CS
14	IOVCC
15	GND
16	VCI
17	GND
18	GND
19	GND
20	NC(TP_IOVCC)
21	NC(TP_RST)
22	NC(TP_VCC)
23	NC(TP_INT)
24	NC(TP_SCL)
25	NC(TP_SDA)

NOTES:

1. DISPLAY TYPE: LTPS, AMOLED
2. VIEWING DIRECTION: FULL VIEWING ANGLE
3. DRIVER IC: CH13620
4. POWER IC: BV6802
5. OPERATING TEMP.: −20°C ~ 70°C
6. STORAGE TEMP.: −30°C ~ 80°C
7. INTERFACE: QSPI
8. SURFACE LUMINANCE: 600CD/M^2 (TYP.)
9. UNMARKED TOLERANCE: ±0.3MM
10. ROHS COMPLIANT

VER.	REVISED DESCRIPTION	REVISER	DATE
01	FIRST ISSUE	CAROL	2024.12.07

MULTI-INNO TECHNOLOGY CO., LTD.

DRAWN BY:	CAROL 2024.12.07		MODULE P/N: MI0193A0-F
CHECKED BY:		SCALE : 1/1	
APPROVED BY:		UNIT: mm	DESCRIPTION: AMOLED MODULE
VERSION NO:	01	SHEET NO.: 1/1	