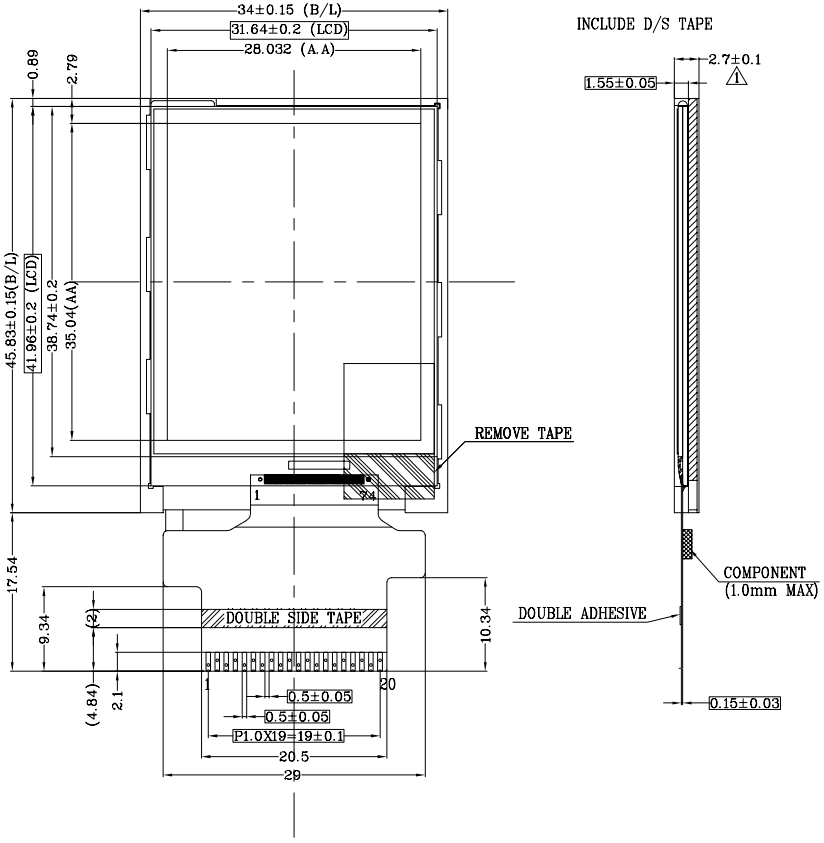

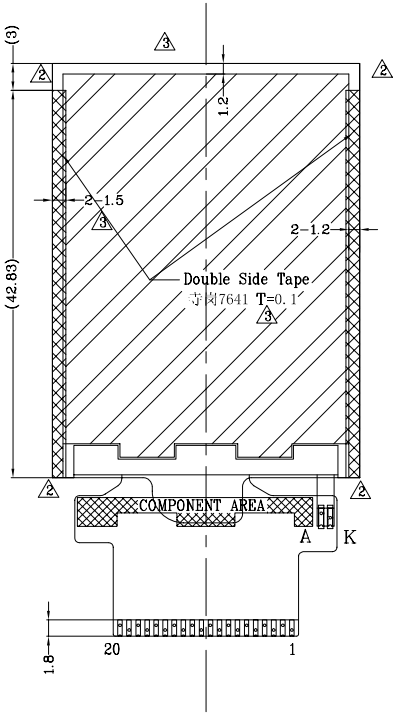

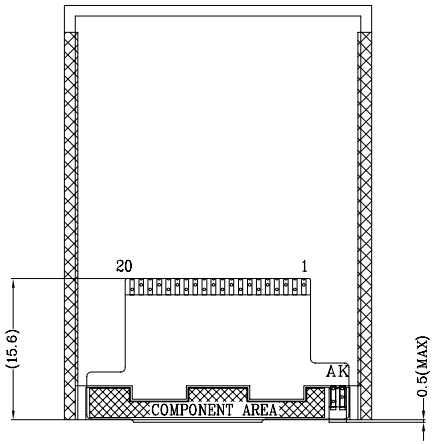

No:	PIN NAME
1	BL_K
2	BL_A
3	GND
4	VDD
5	NC
6	NC
7	/CS
8	/RESET
9	RS
10	/WRR
11	/RDW
12	DB7
13	DB6
14	DB5
15	DB4
16	DB3
17	DB2
18	DB1
19	DB0
20	GND

NOTES:
1. DISPLAY TYPE: TFT-LCD
2. VIEING DIRECTION: 6:00
3. MAIN LCD DRIVE IC: C1L5
4. POLARIZER MODE: TRANSMISSIVE/POSITIVE
5. DRIVE METHOD: 1/160 DUTY
6. VDD: 2.8V TYPICAL
7. BACKLIGHT: WHITE LED-2CHIP
8. OPERATING TEMP: -20°C ~ 70°C
9. STORAGE TEMP: -30°C ~ 80°C
10. UNMARKED TOLERANCE: ±0.30
11. IMPORTANT DIMENSION:
12. REQUIREMENTS ON ENVIRONMENTAL PROTECTION: RoHS

REV	DESCRIPTION
3	更改双面胶型号和宽度。
2	去掉定位柱。
1	更改背光厚度。

MULTI-INNO TECHNOLOGY CO.,LTD.

DRAWN BY:	TITLE: MI0177ET	
CHECKED BY:		
APPROVED BY:	DWG NO: G-3	SCALE:
CONFIRMED BY:	DWG NAME:	UNIT: mm
		SHEET NO: 1 OF 1